THE RACING TECHNOLOGY

19

E. PIRRONE
UCI junior women road world championship 2017

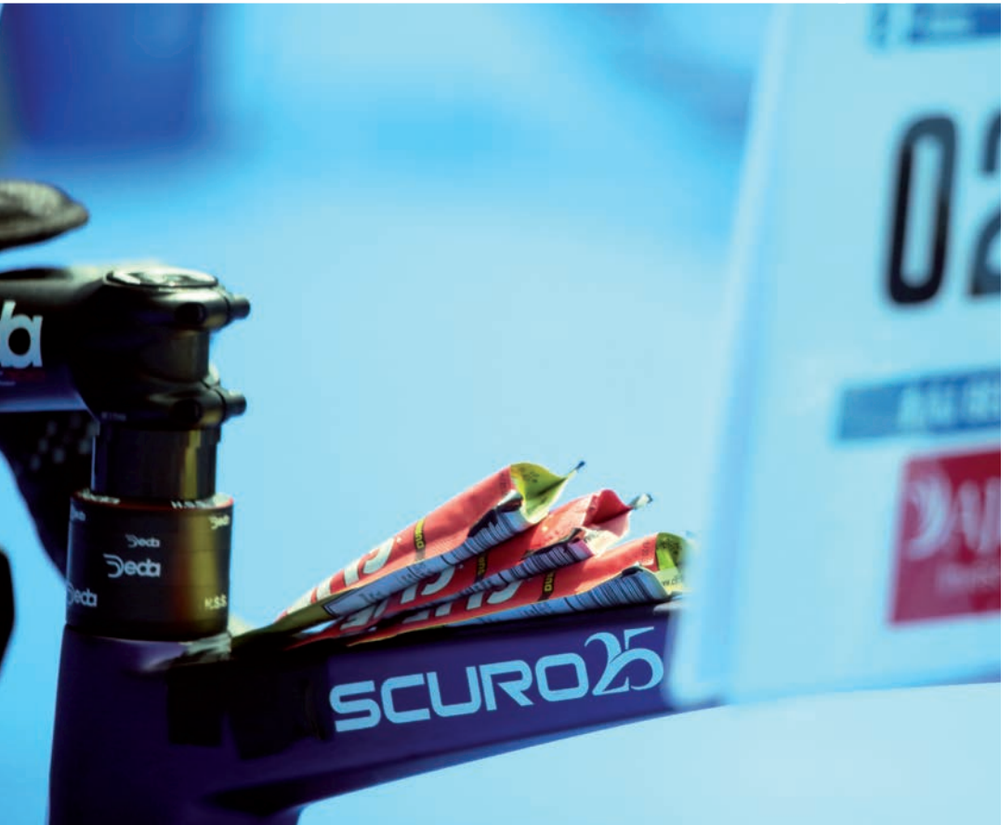

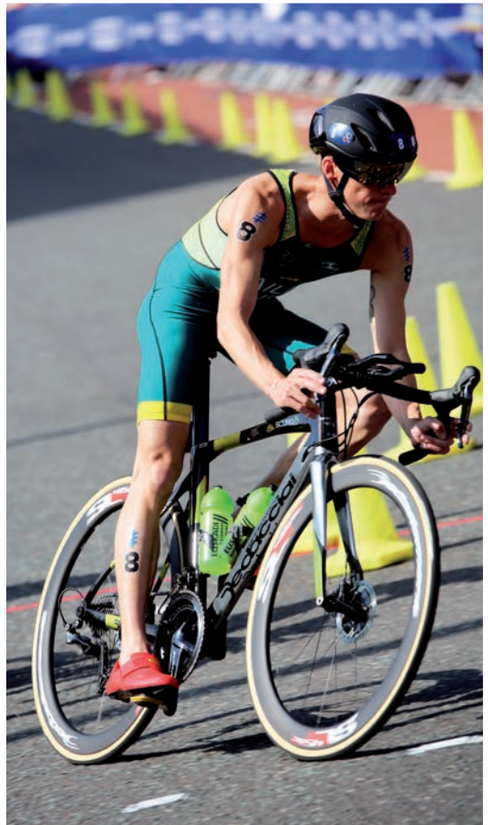

STRADA Dedicciai 19

CONTENTS

CARBON ROAD	SCURO25 DB 4	RAN RS ASYMMETRIC 10	RAN RS 14	ATLETA 18	VERTIGINE DB 24	VERTIGINE 28
METAL ROAD	TITANIO25 34	ZERO25 38				
CROSS DISC	SUPER CROSS DB 42					

SCURO25 DB

THE BEST FRAME IN OUR HISTORY IS BACK WITH AN UPDATED DESIGN AND DISC COMPATIBILITY

COLOR CUSTOMIZATION

SCURO 25
STRADA
Pedaccioli

SCURO25 DB

Carbon monocoque T700/T800	Frame weight 950 g (size M)	Five sizes S, M, L, XL, XXL	Bottom bracket PF30
Inner cables routing for mechanical and electronic devices	Adjustable aero seatpost weight 235 g	Carbon monocoque EDG DB fork weight 430 g	Tapered headtube 1”1/8 - 1”1/2 with integrated headset SSDIFF83
Compatible hanger FRCDPP12LD	Recommended trough axle item number front fork PP12012 - M12*P1.5*120	Recommended trough axle item number rear PP16512 - M12*P1.5*165	

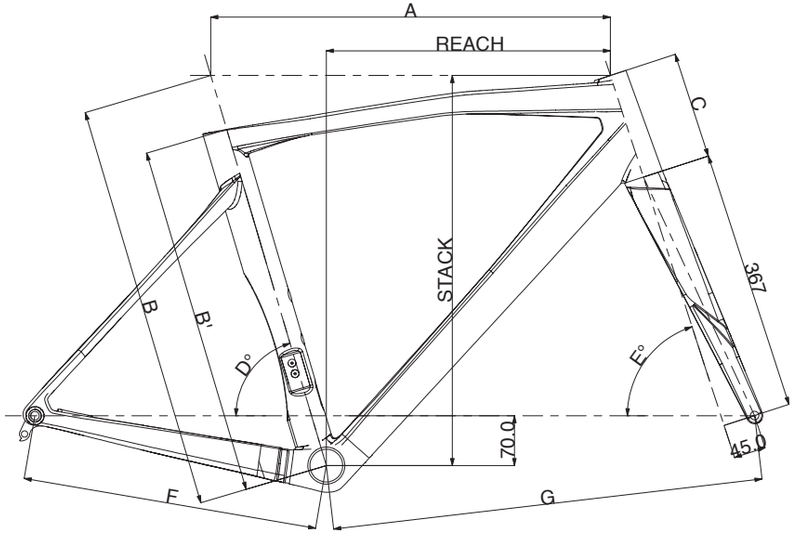

Refer. design	SIZE				
	S	M	L	XL	XXL
A	520	540	561	575	590
B	535	550	571	601	603
B1	458	472	492	522	540
C	115	130	150	180	200
D	74°	74°	73,5°	73,5°	73°
E	71°	72°	72°	72°	72°
F	413	413	416	416	416
G	572	589	605,5	620	635
REACH	368	388	399	404	408
STACK	511	529	548	576	595

SCURO25 DB BLUE

BLUE

GREY

SILVER

BLACK

GLOSSY FINISH

SCURO25 DB BOB BLACK

BLACK MATT

BLACK GLOSSY

RED GLOSSY

BOB FINISH

SCURO25 DB RED

BLACK

RED

WHITE

GLOSSY FINISH

SCURO25 DB ORANGE

ORANGE

GREY

SILVER

BLACK

GLOSSY FINISH

RAN RS ASYMMETRIC

HAVING TWO FRAMES IN ONE IS AMAZING WITH THIS MODERN LOOKING VERSION

COLOR CUSTOMIZATION

APPROVED uci FRAME 40471

RAN RS
DEDACCIAISTRADA.COM
Dedacciai
Dedacciai

RAN RS ASYMMETRIC

Carbon monocoque highest modulus mrc mr60/hr40	**Frame weight 920 g (size M)**	**Five sizes XS, S, M, L, XL**
Bottom bracket PF30	**Inner cables routing for mechanical and electronic devices**	**Seatpost 27,2 mm**
Carbon monocoque K21 fork weight 325 g	**Tapered headtube 1”1/8 – 1”1/4 with integrated headset SSDIFF83114**	**Compatible hanger FRCDINTCCHF13**

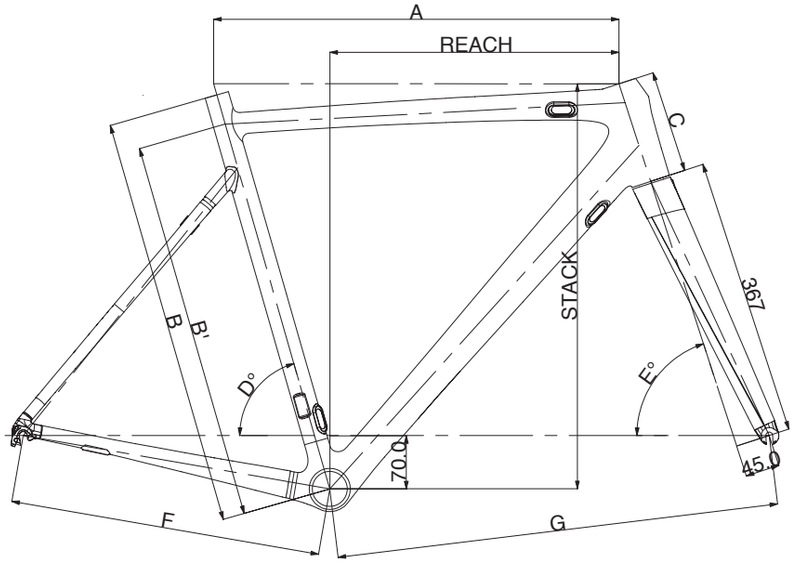

Refer. design	SIZE				
	XS	S	M	L	XL
A	505	520	535	555	575
B	485	505	540	555	585
B1	440	463	500	515	538
C	106	120	135	155	180
D	75°	74,5°	74°	73,5°	73°
E	71,5°	71,5°	72°	72°	73°
F	407	407	410	410	413
G	567	578	583	598	605
REACH	370	376	381	389	397
STACK	505	518	534	553	580

RAN RS ASYMMETRIC

BLACK

SILVER

RED

GLOSSY FINISH

RAN RS

APPROVED · UCI · FRAME · 40471

ESSENTIAL, STIFFER THAN EVER, THIS IS THE WEAPON TO SPRINT HARD IN THE MOUNTAINS

COLOR CUSTOMIZATION

RFIN
RFIN R9
Dedacciai
STRADA
Dedacciai

RAN RS

Carbon monocoque highest modulus mrc mr60/hr40	**Frame weight 920 g (size M)**	**Five sizes XS, S, M, L, XL**
Bottom bracket PF30	**Inner cables routing for mechanical and electronic devices**	**Seatpost 27,2 mm**
Carbon monocoque K21 fork weight 325 g	**Tapered headtube 1”1/8 – 1”1/4 with integrated headset SSDIFF83114**	**Compatible hanger FRCDINTCCHF13**

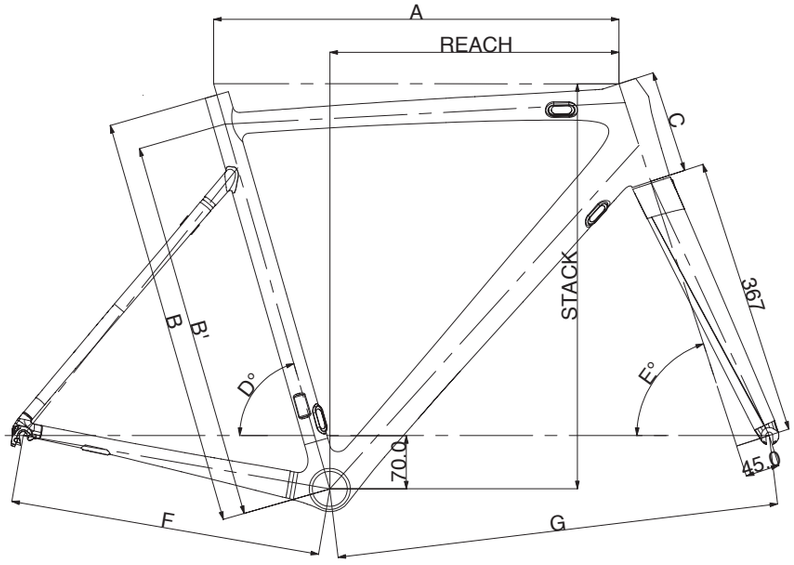

Refer. design	SIZE				
	XS	S	M	L	XL
A	505	520	535	555	575
B	485	505	540	555	585
B1	440	463	500	515	538
C	106	120	135	155	180
D	75°	74,5°	74°	73,5°	73°
E	71,5°	71,5°	72°	72°	73°
F	407	407	410	410	413
G	567	578	583	598	605
REACH	370	376	381	389	397
STACK	505	518	534	553	580

RAN RS
BLACK GLOSSY

BLACK

SILVER

RED

GLOSSY FINISH

RAN RS
RED GLOSSY

RED

WHITE

GLOSSY FINISH

ATLETA

AERO SHAPES AND FLAT GEOMETRY FOR THE MOST DEMANDING ATHLETES

COLOR CUSTOMIZATION

ATLETA
ETRADA
Pedaccioli

ATLETA

Carbon monocoque T700 / T800	**Frame weight 950 g (size M)**	**Five sizes XS, S, M, L, XL**
Bottom bracket PF30	**Inner cables routing for mechanical and electronic devices**	**Adjustable aero seat post 235 g**
Carbon Atleta monocoque fork 370 g	**Tapered head tube 1-1/8” - 1-1/2” with integrated headset SSDIFF83**	**Compatible hanger FRCDINTDR24**

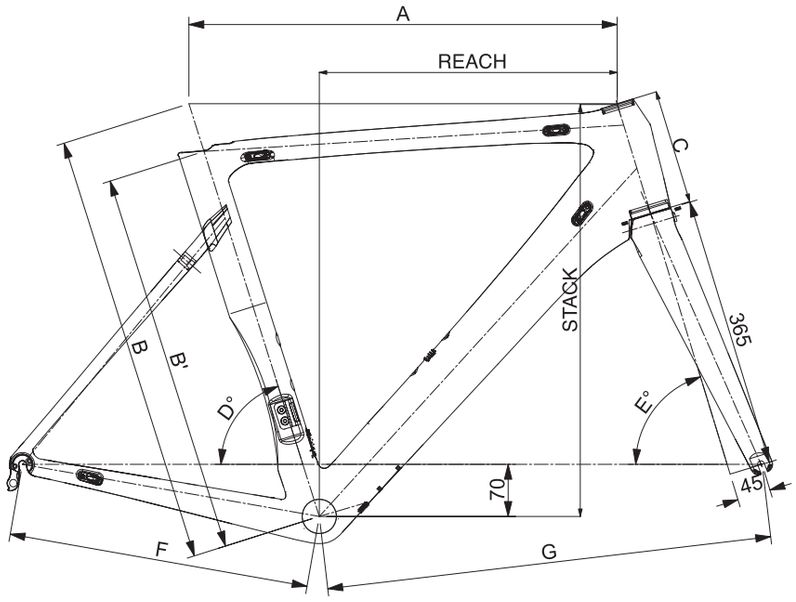

Refer. design	SIZE				
	XS	S	M	L	XL
A	525	545	560	575	595
B	518	540	560	581	605
B1	455	475	495	515	535
C	100	115	135	155	175
D	74°	73°	73°	72,5°	72,5°
E	72°	72,5°	73°	73°	74°
F	405	405	405	405	405
G	573	580	590	600	609
REACH	382	386	396	400	413
STACK	498	512	536	555	577

ATLETA TEAM REPLICA

MULTICOLOR

GLOSSY FINISH

ATLETA BOB BLACK

BLACK MATT

BLACK GLOSSY

BOB FINISH

ATLETA BOB RED

BLACK MATT

BLACK GLOSSY

RED GLOSSY

BOB FINISH

ATLETA GREY ON GREY

NEW

- GREY
- BLACK
- WHITE
- SILVER

GLOSSY FINISH

ATLETA ORANGE AND GREY

NEW

- BLACK
- GREY
- ORANGE

GLOSSY FINISH

VERTIGINE DB

NEW EDG DISC FORK PUSH YOU TO UNBELIEVABLE LIMITS

COLOR CUSTOMIZATION

D3
dedacciai

VERTIGINE DB

Carbon monocoque T700	**Frame weight 980 g (size M)**	**Five sizes XS, S, M, L, XL**	**Bottom bracket PF30**
Inner cables routing for mechanical and electronic devices	**Seatpost 31,6 mm**	**Carbon monocoque EDG DB fork weight 430 g**	**Tapered head tube 1-1/8" – 1-1/2" with integrated headset SSDIFF83**
Compatible hanger FRCDPP12LD	**Recommended trough axle item number front fork PP12012 - M12*P1.5*120**	**Recommended trough axle item number rear PP16512 - M12*P1.5*165**	

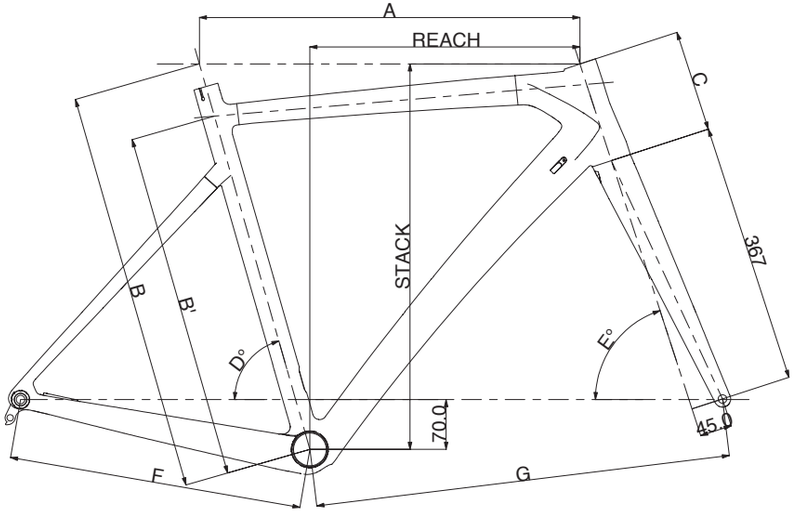

Refer. design	SIZE				
	XS	S	M	L	XL
A	505	520	535	555	575
B	475	495	530	545	575
B1	435	455	490	505	535
C	115	130	145	165	190
D	75°	74,5°	74°	73,5°	73°
E	71,5°	71,5°	72°	72°	73°
F	413	413	416	416	416
G	567	578	584	600	605
REACH	367	374	379	389	395
STACK	516	526	542	561	588

VERTIGINE DB BOB BLACK

RED GLOSSY

BLACK GLOSSY

BLACK MATT

BOB FINISH

VERTIGINE DB BOB RED

RED GLOSSY

BLACK GLOSSY

BLACK MATT

BOB FINISH

VERTIGINE

THE PERFECT MIX OF AERO AND STIFFNESS FOR EVERYONE WHO WANTS TO RIDE HARD

COLOR CUSTOMIZATION

VERTIGINE
pedaccia

VERTIGINE

Carbon monocoque T700	**Frame weight 980 g (size M)**	**Five sizes XS, S, M, L, XL**
Bottom bracket PF30	**Inner cables routing for mechanical and electronic devices**	**Seatpost 31,6 mm**
Carbon monocoque F-24 fork weight 380 g	**Tapered headtube 1-1/8" – 1-1/2" with integrated headset SSDIFF83**	**Compatible hanger FRCDINTDR24**

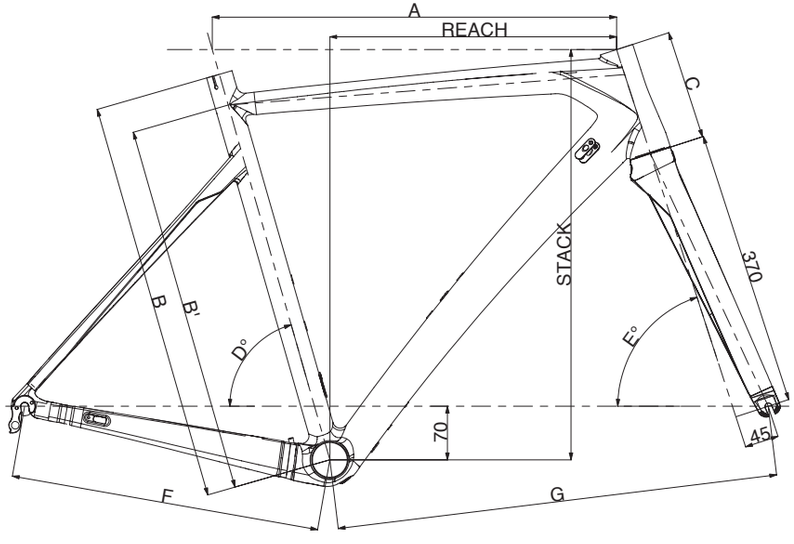

Refer. design	SIZE				
	XS	S	M	L	XL
A	505	520	535	555	575
B	475	495	530	545	575t
B1	435	455	490	505	535
C	115	130	145	165	190
D	75°	74,5°	74°	73,5°	73°
E	71,5°	71,5°	72°	72°	73°
F	407	407	410	410	410
G	567	578	584	600	605
REACH	367	374	379	389	395
STACK	516	526	542	561	588

VERTIGINE BOB RED

RED GLOSSY

BLACK GLOSSY

BLACK MATT

BOB FINISH

VERTIGINE ORANGE

GREY

ORANGE

WHITE

GLOSSY FINISH

VERTIGINE CHOOSE YOUR COLOR NEW

SELECT THE COLOR YOU LOVE FOR FRAME AND STICKERS AND YOU GET DEDATAPE AS FREE

CUSTOMIZATION CHART

STICKERS COLORS

Please choose one

Night

Yellow

Blue

Grey

Light blue

Orange fluo

Silver

Pink

Yellow fluo

Brown

Red

Green fluo

FRAME COLORS

Please choose one (DEDATAPE INCLUDED with the frame kit)

Kawa Green

Pink Panther

Finland Light Blue

Polar White

Sky Blue

Fuego Red

Night Black

Milwaukee Orange

Pantegan Grey

Green Apple

Ocean Dark Blue

Sea Foam Green

Gun Barrel Grey

Yellow Fly

Bishop Violet

TITANIO 25

SPECIAL EDITION WITH THE BEST METAL MASTERPIECE EVER

SIZE CUSTOMIZATION

COLOR CUSTOMIZATION

TITANIO 25
STRADA
Pedacciai

TITANIO 25

Dedacciai Titanium 25th anniversary tubeset with front triangle grade 9 and rear triangle grade 2	Weight 1.450 g (size M)	Six sizes XS, S, M, L, XL, XXL
Bottom bracket BSA	External cables routing, Di2/eps compatibility on demand	Seatpost 31,6 mm
Carbon monocoque EDG fork weight 350 g	Tapered headtube 1”1/8 – 1”1/2 with integrated headset SSDIFF83	Compatible hanger FRCDINTTIT2

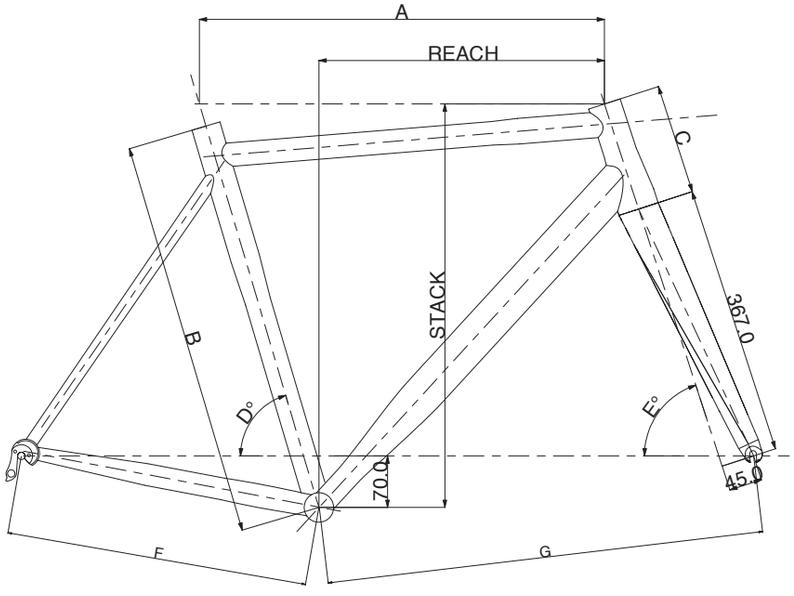

Refer. design	SIZE					
	XS	S	M	L	XL	XXL
A	500	515	540	555	570	585
B	470	490	520	540	560	580
C	115	125	150	165	185	200
D	74°	74°	73,5°	73,5°	73,5°	73,5°
E	71,5°	72°	72°	72°	72°	72°
F	407	407	410	410	413	413
G	553	564	585	600	615	631
REACH	353	365	378	388	397	408
STACK	513	524	548	562	581	596

TITANIO25 MATT

TITANIUM

RED GLOSSY

BLACK GLOSSY

ZERO25

OUR HISTORY GOES FURTHER WITH THIS STATE OF THE ART FRAME

SIZE CUSTOMIZATION

COLOR CUSTOMIZATION

ZERO25
Dedacciai
STRADA

ZERO25

Dedacciai Steel 25th anniversary tubeset	Frame weight 1.550 g (size M)	Six sizes XS, S, M, L, XL, XXL
Bottom bracket BSA	Inner cables routing, Di2/ eps compatibility on demand	Seatpost 27,2 mm
Carbon monocoque F-14 fork weight 320 g	Standard headtube 1”1/8 with integrated headset MSS118	

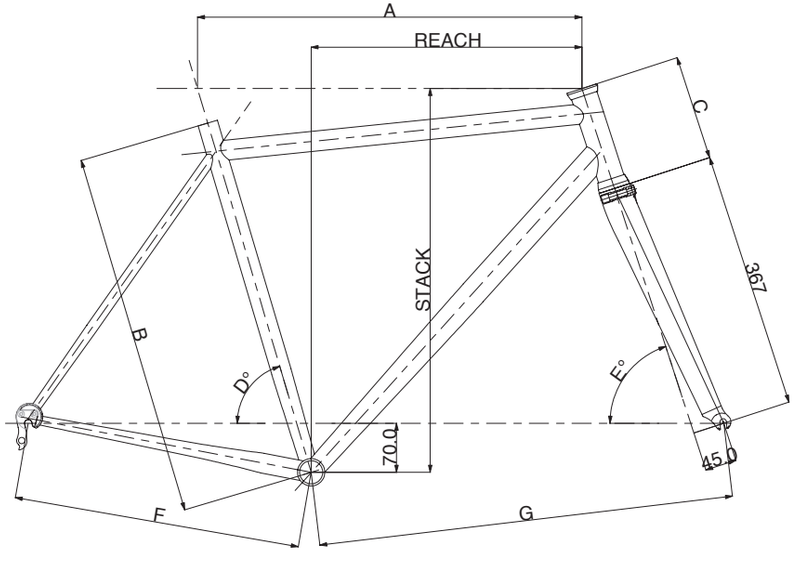

Refer. design	SIZE					
	XS	S	M	L	XL	XXL
A	500	515	540	555	570	585
B	470	490	520	540	560	580
C	115	125	150	165	185	200
D	74°	74°	73.5°	73.5°	73.5°	73.5°
E	71.5°	72°	72°	72°	72°	72°
F	407	407	410	410	413	413
G	553	564	585	600	615	631
REACH	353	365	378	388	397	408
STACK	513	524	548	562	581	596

ZERO25

BLACK

RED

SILVER

GLOSSY FINISH

SUPER CROSS DB

WHATEVER IS A RACE OR A TRAINING YOU'LL LOVE IT AND YOU CAN'T STOP RIDING

COLOR CUSTOMIZATION

SUPER CROSS D3
Deda Elementi
Deda Elementi

SUPER CROSS DB

Carbon monocoque highest modulus MRC MR 60	weight 1.050 g (size M)	Four sizes S, M, L, XL	Bottom bracket BB86
Inner cables routing for mechanical and electronic devices	Seatpost 27,2 mm	Tapered headtube 1-1/8” - 1-1/2” with integrated headset SSDIFF83	Carbon moncoque F61 fork weight 450 g
Compatible hanger FRCDPP12GTC	Recommended trough axle item number front fork PP12012 - M12*P1.5*125	Recommended trough axle item number rear PP16512 - M12*P1.5*165	

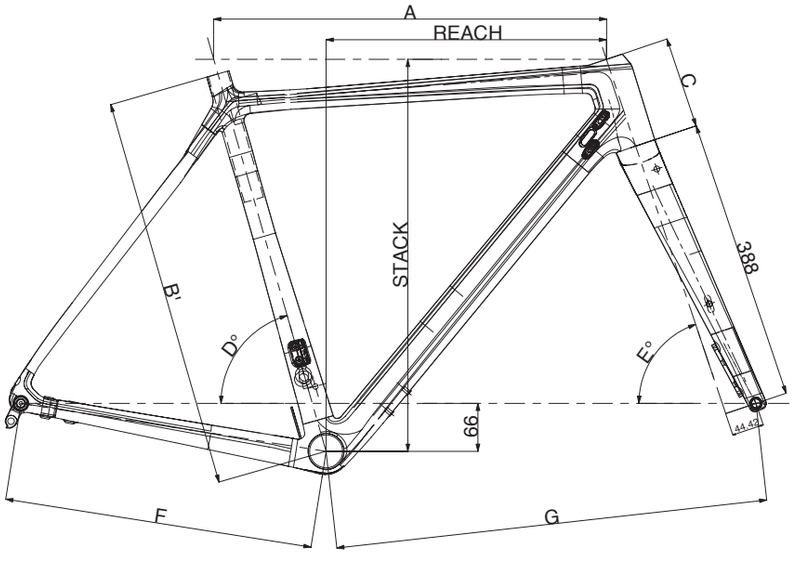

Refer. design				
	S	M	L	XL
A	520	540	555	570
B1	520	540	560	580
C	110	125	140	150
D	74,5°	74	73,5°	73°
E	71°	71,5°	72	72,5°
F	425	425	425	425
G	582	595	600	605
REACH	375	386	391	397
STACK	522	539	554	566

SUPER CROSS DB GREEN

BLACK

GREEN

GLOSSY FINISH

SUPERCROSS DB ORANGE

BLACK

ORANGE

GLOSSY FINISH

PERFORMANCE CHART OF EACH FRAME. SCORE RANGE FROM 6 TO 10

	PRO RACE	ENDURANCE	MARATHON	TRAINING	TIME TRIAL	MOUNTAIN TT
SCUR025 DB	10	9	9	9	8	8
RAN RS ASYMMETRIC	10	8	8	8	7	10
RAN RS	10	8	8	8	7	10
ATLETA	10	8	8	8	9	7
VERTIGINE DB	9	8	8	8	-	8
VERTIGINE	9	8	8	8	-	8
TITANI025	7	10	10	10	-	8
ACCIAI025	7	10	10	10	-	7
SUPERCROSS DB	9	9	9	9	-	-

THE INFORMATION AND PICTURES CONTAINED IN THIS CATALOGUE ARE VALID AT TIME OF PRINTING. DEDACCIAI SRL RESERVES THE RIGHT TO MODIFY THE CONTENT AND APPEARANCE OF PRODUCTS IN THE CATALOGUE. DEDACCIAI LOGO AND PRODUCTS ARE OWNED BY DEDACCIAI SRL, ANY UNAUTHORIZED USE THEREOF IS PUNISHABLE BY LAW.

ITALIA
SUZUKI

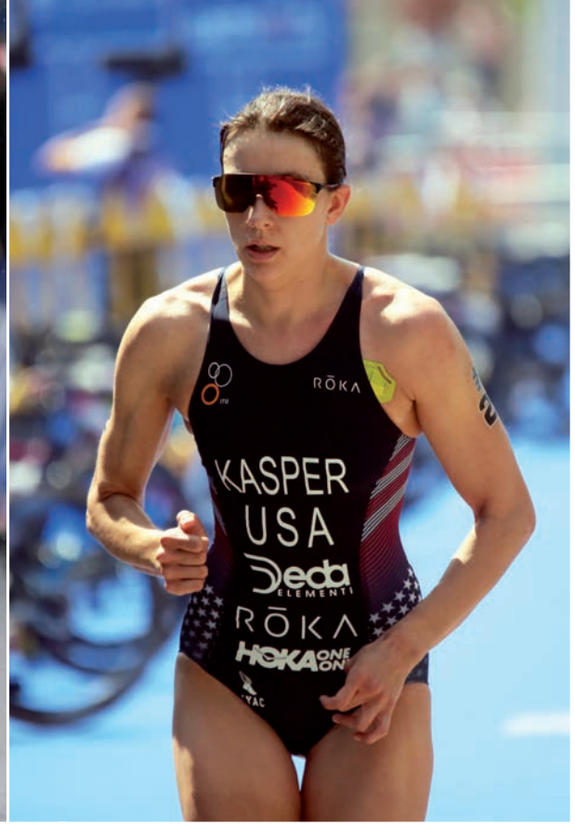
RŌKA
KASPER
USA
Deda
ELEMENTI
RŌKA
HOKA ONE ONE

AJBell
Invest smart
Carriageworks Theatre
Dedacciai

DÉVAY
Mislawchuk
CAN

RSA
CURO25
Dedacciai

Mislawchuk
CAN

2019 Dedacciai STRADA
THE RACING TECHNOLOGY

Via Leonardo da Vinci, 19
26010 Campagnola Cremasca (CR) - Italy
Tel. +39 0373 74 499
Fax +39 0373 750 029
info@dedacciaistrada.com
www.dedacciaistrada.com